Trimvent® Select Xtra S13

Surface mounted slot ventilator

Trimvent® Select Xtra S13 Ventilator Trimvent® Select Xtra XC13 Canopy

For use on PVCu, timber or aluminium windows

Trimvent Select Xtra S13 is a surface mounted plastic slot ventilator that fits over a 13mm slot in a window and provides an Equivalent Area (EA) of 4400mm² or 5000mm² and can be fitted with an XC13 canopy or GS22 grille.

The XS13 is ideal for both new build and refurbishment situations using any window material and is available in a variety of colours.

The Xtra design improves the Trimvent Select range to offer increased ventilation giving optimum airflow (and therefore Equivalent Area) utilising existing Trimvent Select slot sizes and vent lengths, meaning they are 60% more efficient than previous models.

Specifically developed for recent revisions to Part F of the Building Regulations, Ventilation (England & Wales), and to improve performance for requirements throughout the UK and Europe.

Trimvent Select ventilators have been specified and fitted on millions of windows throughout the UK and mainland Europe over the last fifteen years.

Features and Benefits

- **Revised design to improve performance and Regulations compliance**
- **Unique occupant controllable tilting T-bar**
- **Rounded unobtrusive shape**
- **Can be fitted on the sash, frame or overhead section**
- **For use over 13mm slot**
- **Based on successful Trimvent® principle**
- **Sculpted finger recess**
- **Matching screw covers**
- **Patented and registered design**
- **Available in vent and canopy packs**
- **Remote control vent available**
- **Sleeve available for hollow profiles**
- **When specified correctly complies with Building Regulations**

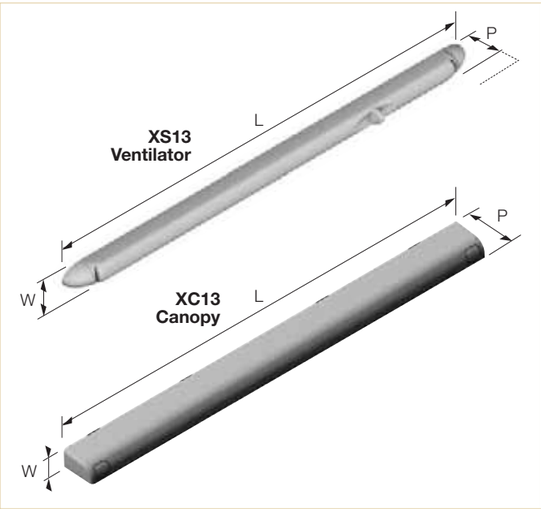

Details

Product	Product Code	(L) Length	(W) Width	(P) Projection Closed-Open	EA (mm²)	Free Area (mm²)	Slot Detail
XS13 4400EA vent screw fix	TS1134470	411	18.5 - 30	20 - 27	4400	4285	173.5 20 173.5 13
XC13 412 canopy screw fix	TS2134040	411	18	32.5	4400	5027	
XS13 & XC13 4400EA screw fix pack	TS4134470						
XS13 4000EA vent clip fix	TS1134071	411	18.5 - 30	20 - 27	4000	4149	
XC13 412 canopy clip fix	TS2134041	411	18	32.5	4000	4809	
XS13 & XC13 4000EA clip fix pack	TS4134071						
XS13 5000EA vent screw fix	TS1135070	497	18.5 - 30	20 - 27	5000	5230	215 20 215 13
XC13 497 canopy screw fix	TS2135040	497	18	32.5	5000	6258	
XS13 & XC13 5000EA screw fix pack	TS4135070						
XS13 5000EA vent clip fix	TS1135071	497	18.5 - 30	20 - 27	5000	5096	
XC13 497 canopy clip fix	TS2135041	497	18	32.5	5000	6055	
XS13 & XC13 5000EA clip fix pack	TS4135071						
GS22 241 pair grilles*	TS3224050	241 x 2	27	1.5	5000	10022	232 25 232 22 grilles only
Sleeve	Please phone for details						Please phone for details

EA figures above and marked on vents are achieved when fitted to manufacturer's recommendations. Tested in accordance with BS:EN 13141-1 (2004). *Typically used for overhead sections.

Manufactured from

PBTP (UV Stable) & POM, Canopy - PVCu

Recommended screws

3.5mm (No.6) Pan Head or equivalent

Standards

Tested in accordance with BS EN 13141-1:2004 (air flow, air leakage and weather tightness)

Acoustic performance tested in accordance with BS EN ISO20140-10:1992, BS EN ISO140-10:1991 and single figures to BS EN ISO717-1:1991

Through sash

Performance

(Full test details available on request)
Equivalent Area - see above
Free Area - see above
Air Leakage (m³/hr @ 50Pa) - screw fix - 2.42, clip fix - 7.29. 5000 version screw fix - 4.57, clip fix - 5.69
Water Resistance (Pa) - 4400EA version - 600Pa
5000EA version - 450Pa
Acoustic $D_{n,e,w}$ (+/-) - 4400EA version - vent open 32 (0;1), vent closed 41 (0;-1). 5000EA version - vent open 32 (-1;0), vent closed 35 (0;0)

Finishes

Suffix product code with:
-392 (white), -315 (brown), -496 (bright white), -662 (toffee)

More information

enquiries@titon.co.uk / 01206 713801